LADDER PULL HANDLES

OFFSET LADDER PULL HANDLE BACK-TO-BACK
SATIN STAINLESS STEEL L27

COD. L2736X48

Cutting guide

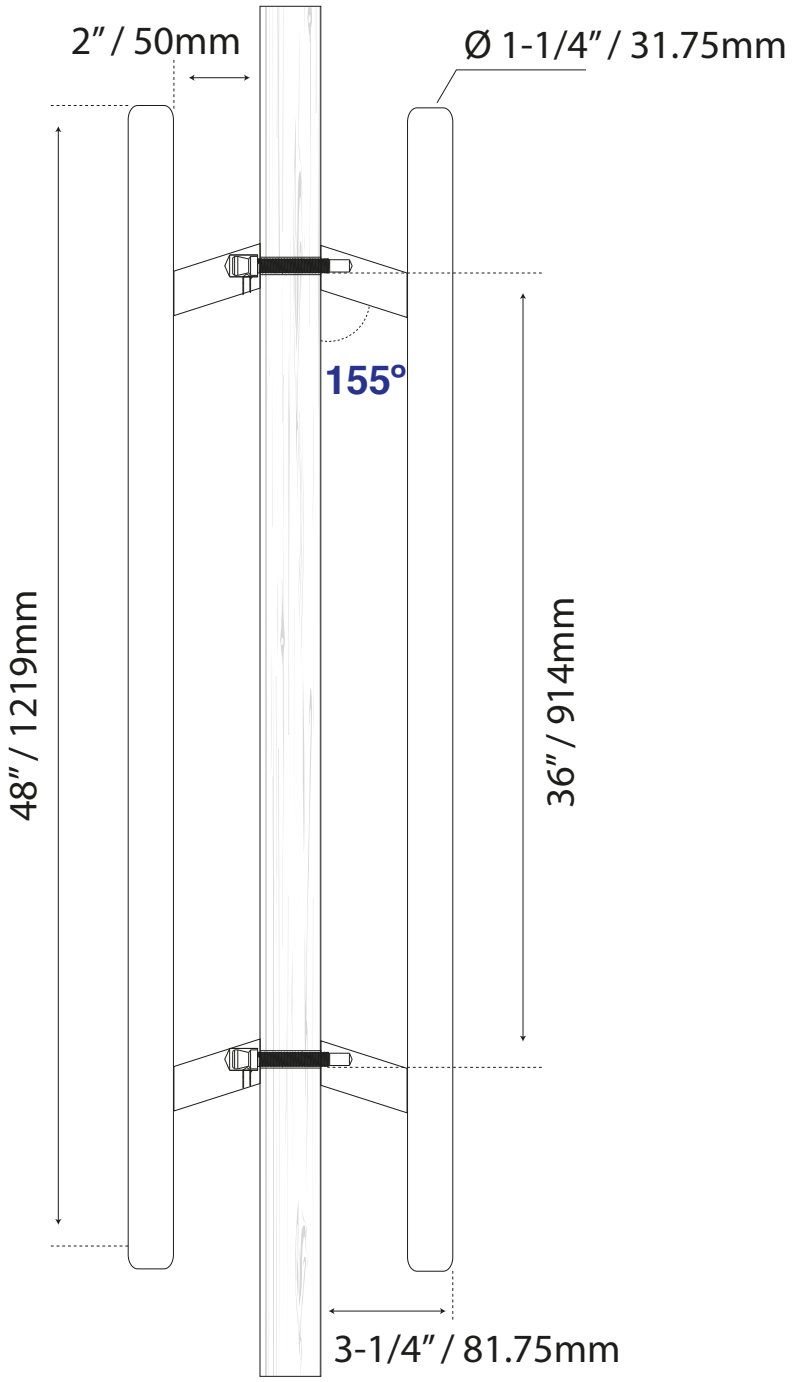

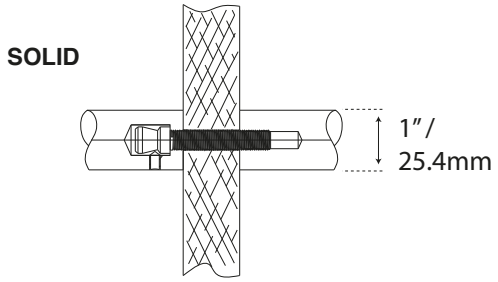

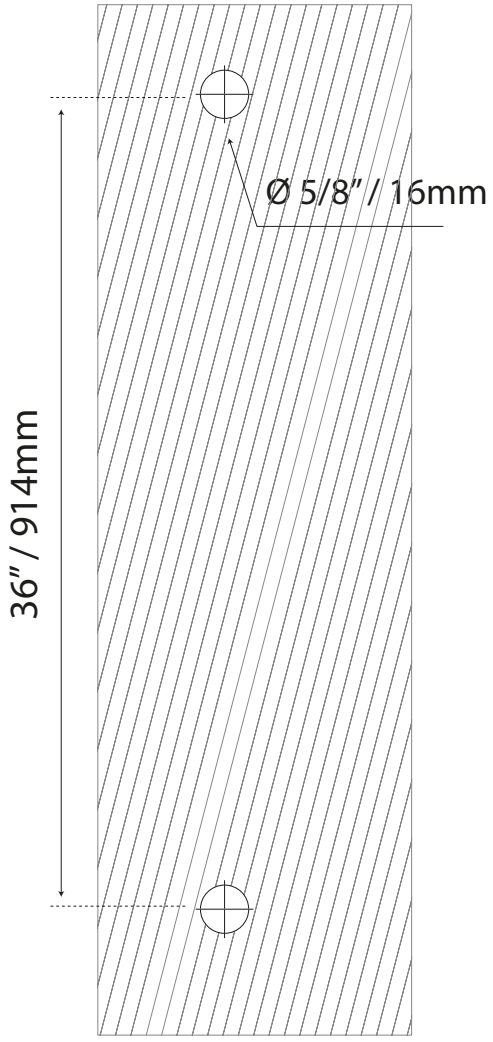

unscaled format